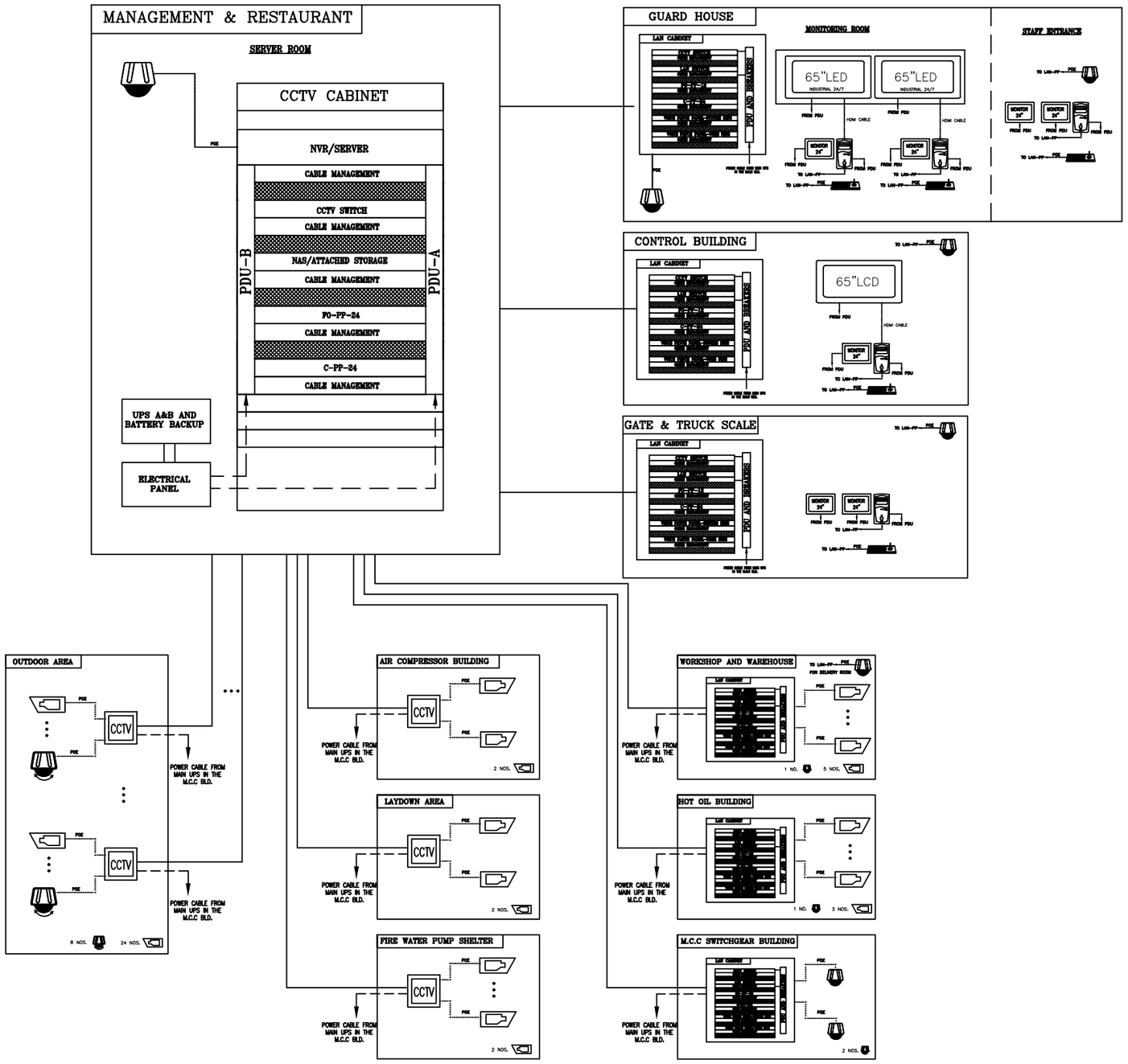

CCTV SYSTEM

GENERAL NOTES

1. THIS IS A PRELIMINARY DRAWING AND SHALL BE DEVELOPED AND REVISED DURING DETAIL DESIGN.
2. VENDOR/SUPPLIER SHALL CHECK ALL OF THE DRAWINGS AND DOCUMENTS BEFORE EXECUTION AND DECLARE ANY INCONSISTENCY.
3. EXACT TYPE AND QUANTITY OF CAMERAS SHALL BE FINALIZED IN DETAIL DESIGN
4. ALL DESKTOP AND LARGE SCREENS SHALL BE INDUSTRIAL TYPE AND 24/7.
5. TYPE, SIZE AND NUMBER OF POWER AND FIBER OPTIC CABLES SHALL BE FINALIZED IN DETAIL DESIGN.
6. CAMERAS SHALL CONNECTED TO THE CENTRAL SYSTEM BY STAR TOPOLOGY.
7. FOR DISTANCE LESS THAN 100M, CAT6 CABLE CAN BE USED INSTEAD OF FOC.
8. ATLEAST 2 TB H.D.D SHALL BE DEDICATED IN NAS OR NVR ATTACHED STORAGE FOR EACH CAMERA.
9. ALL CAMERAS SHALL SUPPORT IR.
10. GATE CAMERAS SHALL BE ATLEAST 8MP.
11. ALL CAMERAS SHALL BE ATLEAST 5MP.
12. ALL CCTV JUNCTION BOXES SHALL BE CONNECTED TO CCTV MAIN CABINET VIA TWO DIFFERENT ROUTES:
    - VIA DIRECT FIBER OPTIC CABLE FROM JUNCTION BOX TO CCTV MAIN CABINET
    - VIA JUNCTION BOX IN THE VICINITY OF IT.
13. CAMERAS AND RECORDING SYSTEM SHALL SUPPORT H.265 HIGH QUALITY STANDARD.
14. ALL CAMERAS SHALL BE IP-BASED AND SHALL SUPPORT ONVIF.
15. ALL FIXED CAMERAS SHALL BE INSTALLED ON THE 5M POLES
16. ALL SPEED DOME CAMERAS SHALL BE INSTALLED ON THE 8M POLES
17. ONE OF THE SPEED DOME CAMERAS SHALL BE INSTALLED ON THE 21M TOWER FOR COVERING TOP OF TANKS
18. ALL 5, 8 AND 21M POLES/TOWERS SHALL BE SUPPLIED BY CCTV VENDOR.
19. EXACT NUMBER OF PASSIVE ACCESSORIES SHALL BE FINALIZED IN DETAIL DESIGN
20. ALL REQUIRED PATCH CORDS, PIGTAILS, AND OTHER PASSIVE AND ACTIVE ACCESSORIES ARE IN THE CCTV VENDOR SCOPE OF WORK.
21. VENDOR SHALL SUPPLY ALL RELEVANT VOLTAGE CONVERTERS REQUIRED FOR THE CCTV SYSTEM OPERATION.

LEGEND AND ABBRAVIATION

INDOOR DOME FIXED CAMERA, IP-BASED	FIBER OPTIC CABLE(FOC)
COLOR SPEED DOME CAMERA, IP-BASED, OUTDOOR TYPE, IP66	UTP/FTP/SFTP, CAT6 CABLE
FIXED CAMERA, IP-BASED, OUTDOOR TYPE, IP66	POWER/PAGING CABLE
PTZ CAMERA, WEATHER PROOF, IP66	WP — WEATHER PROOF
CLOSED CIRCUIT TELEVISION (CCTV) JUNCTION BOX	EX — EXPLOSION PROOF
	NAS — NETWORK ATTACHED STORAGE
	NVR — NETWORK VIDEO RECORDER
	PDU — POWER DISTRIBUTION UNIT
	PP — PATCH PANEL

REFERENCE DRAWINGS	DWG No.

KEY PLAN

REV.	DATE	Description	Prepared	Checked	Approved
B00	24.AUG.2021	AFC	N.M.JAHROMI	F.REZAIE	N.SADRI
A01	26.JULY.2021	IFA	N.M.JAHROMI	F.REZAIE	N.SADRI
A00	10.MAY.2021	IFA	N.M.JAHROMI	F.REZAIE	N.SADRI

PROJECT TITLE:
BITUMEN PRODUCTION AND BITUMEN & HEAVY HEAVY PETROLEUM PRODUCTS EXPORT (STORAGE) TERMINAL

DRAWING TITLE:
CCTV SYSTEM BLOCK DIAGRAM

CONTRACT NO.: ٤٧٥/١٢٠٠/١٠٠٢

REF NO.: | *SC.:* NTS

DOCUMENT NO. : BI103-EB-TC-BLD-0004 | *SIZE:* A3

PROJECT	PHASE	DISCIPLINE	DOC. TYPE	SERIAL	REVISION	SHEET NO.
BI103	EB	TC	BLD	0004	B00	1 OF 1